SXSOps
Power & Control Accessories

3 Channel ACCESSORY POWER PACK

Take control over your accessories with SXSOps Accessory Power Packs. An ultra-compact design greatly reduces wiring for powering Auxiliary Lighting, Sound System, Horn, Signal Lights, USB ports and more. Negative switchec inputs save switches and increases reliability and safety.

Features

- 3 or 5 independent channels can supply up to 25 Amps (300 Watts) of continuous current per channel
- Ultra compact size to fit practically anywhere
- Greatly reduces wiring and simplifies installation
- Simple Negative Switching
- Saves your rocker switches
- Water Proof
- Detailed instructions included

Models:
APP3 – 3 Channel Accessory Power Pack
APP5 – 5 Channel Accessory Power Pack
Dimensions:

- 2.4"x1.0"x1.4" (L x W x H)
- 60mm x 25mm x 35mm

SXSOPS 3 Cannel Accessory Power Pack

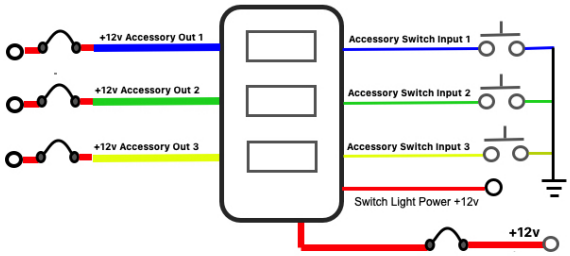

Power all your accessories with one module

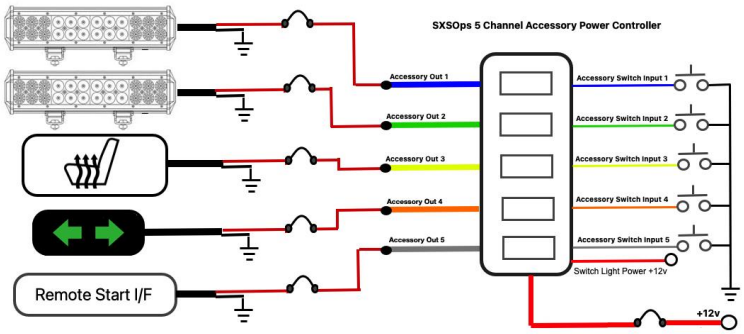

SXSOps 5 Channel Accessory Power Pack

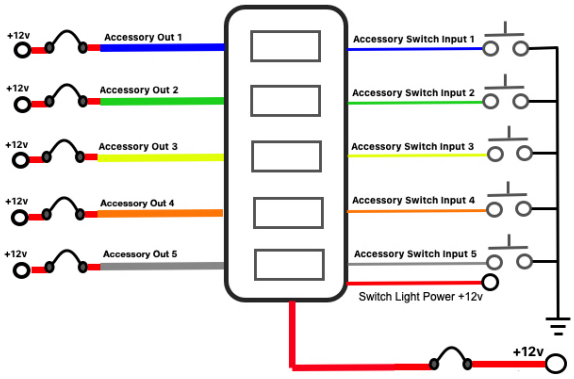

SXSOPS.COM or SXSOPS.SHOP or INFO@SXSOPS.COM