2021 Can-Am Defender Limited
Switch for power window

o Intro – page 1; pinout - page 2; photos - page 3; schematic – page 4; alternative switch – page 5.

o The driver's door has a pair of switches, one for driver's window (DS_DS) and one for passenger's window (DS_PS).
- o Both switches are electrically identical, i.e., they can be swapped if one fails.
- o But the switches are in housing. The housings are identical but rotated 180°. The inner side of the housing is grooved so that the two housings slide together vertically. The result is that it is not possible to simply swap the switches while in their housings and reinsert into the door opening – either the switch will be upside down (UP will now be in the DOWN position) or the housings will not fit into the opening (because the grooved faces are now facing outward rather than inward).
- o The 2021 parts diagram, "07- Body - Doors - Front Section", shows:
  - o Both switches are a 705800048 switch (diagram# 300m) inside of a 715900526 "LH Power Window Switch Housing" (diagram# 300aq).
    - o Separating the 705800048 switch from the 715900526 housing requires depressing the four retention tabs, which are at the ends of the switch and accessible via the two large gaps visible from the rear of the switch/housing. I spent an hour trying various tools but was unsuccessful. I was able to get an initial release at both ends so that the switch moved up about 1/32" and even had one end partially out but was unable to make further progress. Purchasing a new housing might be the better time/money trade-off unless someone has a proven technique with commonly-available tools or simple DIY tools.
  - o Note that the parts diagram also shows another 705800048 switch (diagram# 400m) inside of 715900527 "RH Power Window Switch Housing" (diagram# 400aq). Those are for the passenger door – all 400-series diagram numbers in the "07- Body - Doors - Front Section" diagram are for the passenger door.
  - o To access the diagram: epc.brp.com ►Side by Side ► 2021 ► 002 – SSV – North America – Defender Series ►012 – Defender MAX HD10 - LTD CAB - North America ► 07- Body - Doors - Front Section. (Unfortunately, hyperlinks do not work.)

o The switches were removed from the door panel by gently prying with plastic trim tools. The 715900526 housing has retention tabs (press in toward the housing) in the middle of the each end but no retention tabs on the outer side. It is NOT necessary to remove the door panel.
- o Because of the way the left and right housings slide together you might find that one side or the other starts to pull up more easily. My recollection is that the left side (DS_DS) came out first (it's been a few weeks since disassembly).

o While removing the housing/switch from the connector remember to release the latch at the bottom of the housing.

o Use this information at your own risk. Here are some suggested preliminary tests to determine if yours is the same.
- o With the switch removed from the connector, measure the following on the connector. This applies to all 3 connectors but to test either passenger window connector (DS_PS or PS_PS), a working 705800048 switch must be installed in the _PS connector on the other side.
  - o With power on, measure Vdc between a ground point (e.g., unpainted bolt under dash) and Pin 1, 6, and 8 (individually). Each should be 12-14 Vdc.
  - o With power on, measure Vdc between a ground point (e.g., unpainted bolt under dash) and Pin 3, 4, and 7 (individually). Each should be 0 Vdc.
  - o With power <u>off</u>, measure Ohms between Pins 2 and 5 (should be the window motor). My driver-side motor measured 0.5 Ω (after nulling the probes); the passenger-side motor from the driver-side, 1.3 Ω.

o My DS_DS became unreliable at less than 4 miles and less than 4 months. DOWN works reliably but UP is unreliable. But the switch tests OK with a DMM. But the window works OK with the DS_PS switch installed in the DS_DS connector.

o The switch appears to be impossible to disassemble to access the internals (without destroying the switch and possibly the housing).

o 2021.02.25: My dealer says that they will replace the wiring harness under warranty (my unit is less than a 5 months). I will schedule that for spring/summer. In the mean time, I am using a non-Can-Am switch (page 5).
- o This vague "wiring harness replacement" raises questions about whether the replacement also protects DS_PS. And whether the replacement also protects PS_PS; is there a separate PS_PS wiring harness replacement and, if so, will that be replaced as part of the current warranty repair. My dealer has not yet responded.
- o I assume that the dealer has info about the switch problem being caused by the wiring harness rather than the switch itself. Hopefully they know what they're doing. Previously my strategy had been to stock up on replacement switches.

2021 Can-Am Defender Limited
Switch for power window

THE DIAGRAMS ON THIS PAGE APPLY TO DS_DS.

The other two connectors are similar except that DS_PS pins 2 and 5 (the motor pins) are routed to PS_PS pins 3 and 4. Then PS_PS pins 2 and 5 are connected to the passenger side motor (M-1 and C-1).

DS_DS CONNECTOR

front of connector

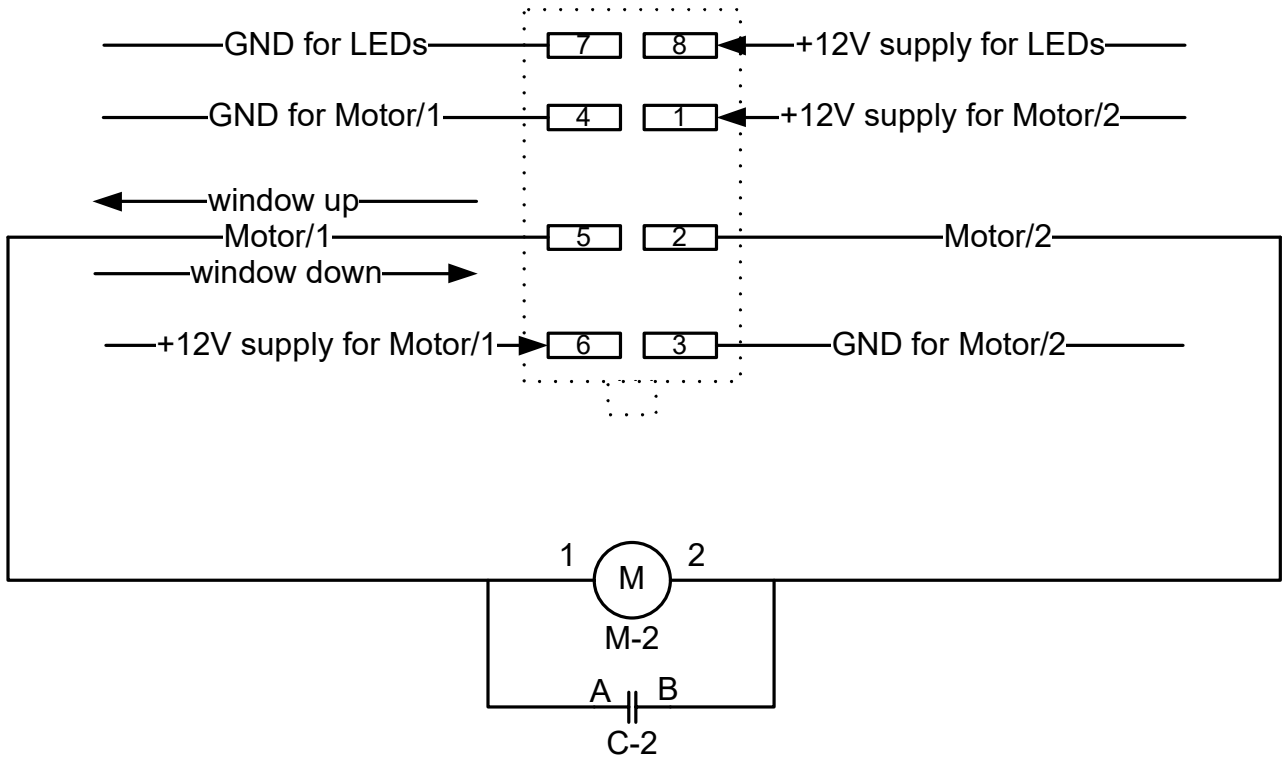

DS_DS SWITCH

rear of switch

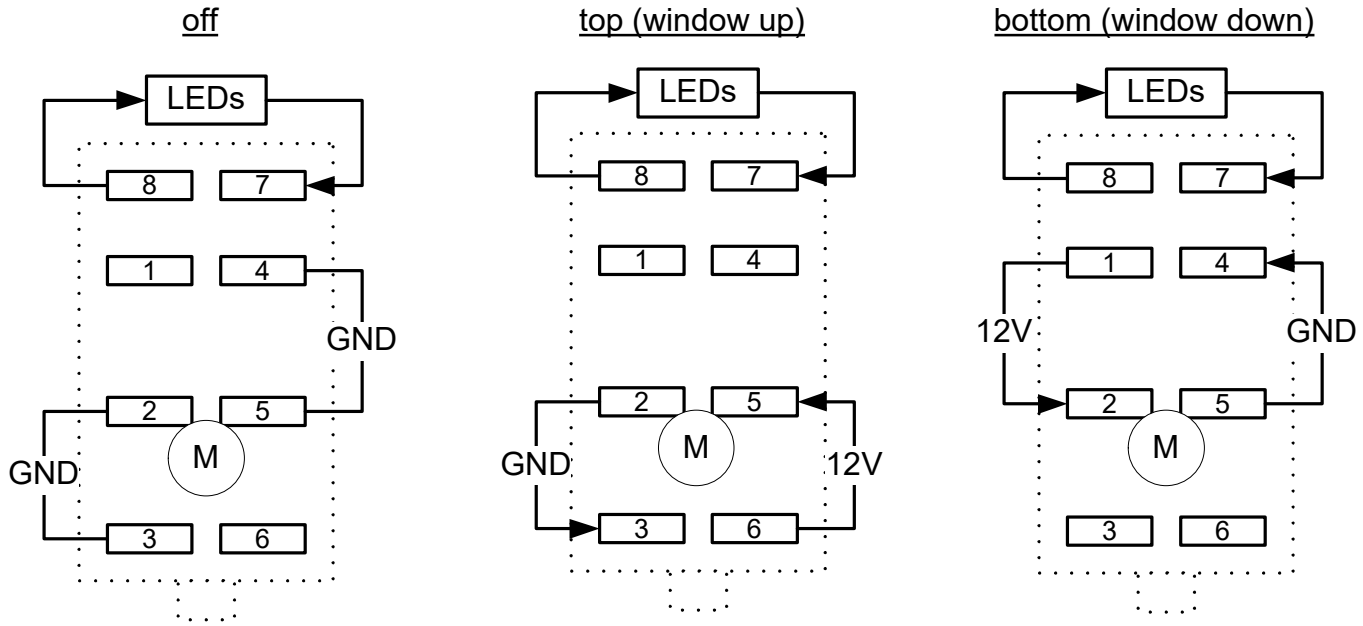

NOTE

LEDs DMM Fluke 3000 FC measured V_{drop} as 1.7V.

705800048 switch for driver's window (DS_DS; the left-hand switch) in its 715900526 housing

o Note the lip on the left side of the housing. The DS_PS housing has the lip on the right side.

o Note the grooves on the right side of this housing. It slides together with another instance of itself, i.e., take another 715900526 housing, rotate it 180°, then slide the two 715900526 housings together.

- o The left housing will slide down into the right housing and vice-versa. As I recall, my left housing was slid down into the right housing (it's been a few weeks since disassembly).

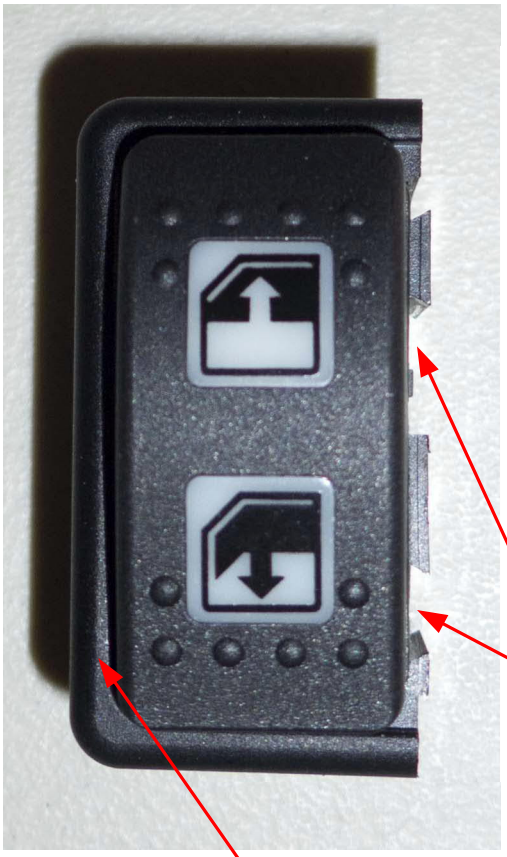

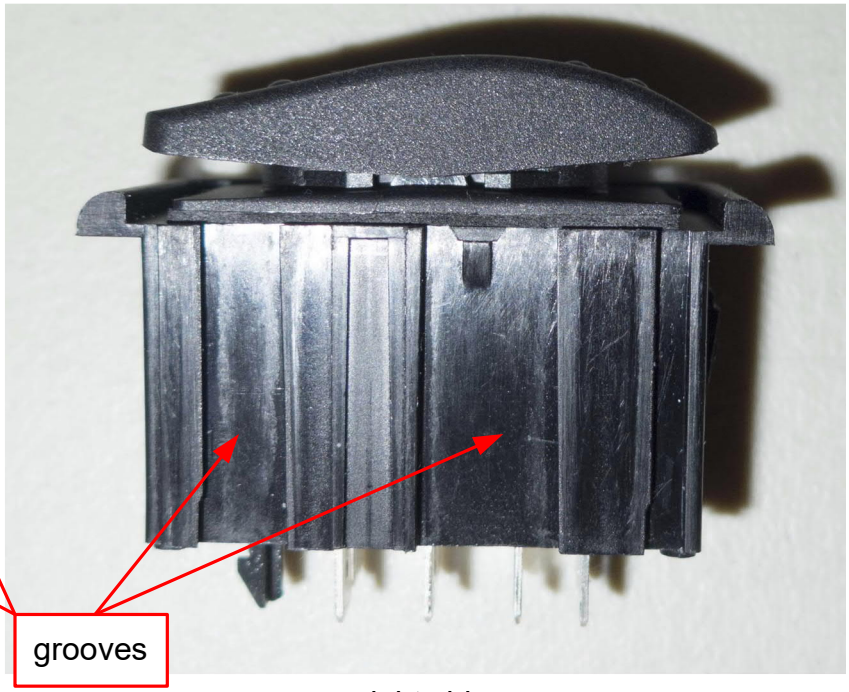

grooves

right side

lip

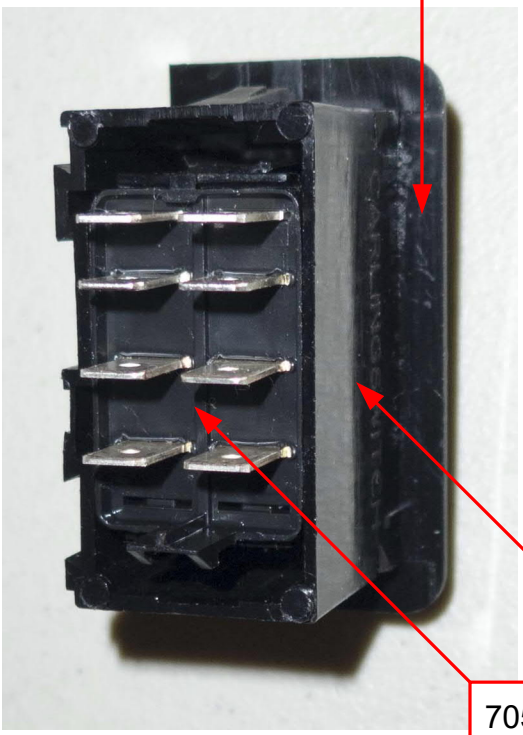

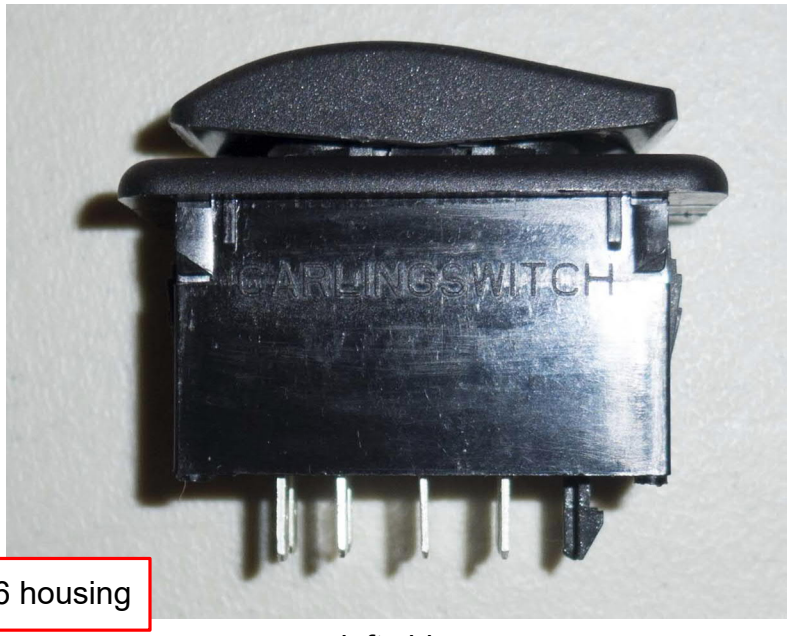

715900526 housing

left side

705800048 switch

DOORS SWITCH

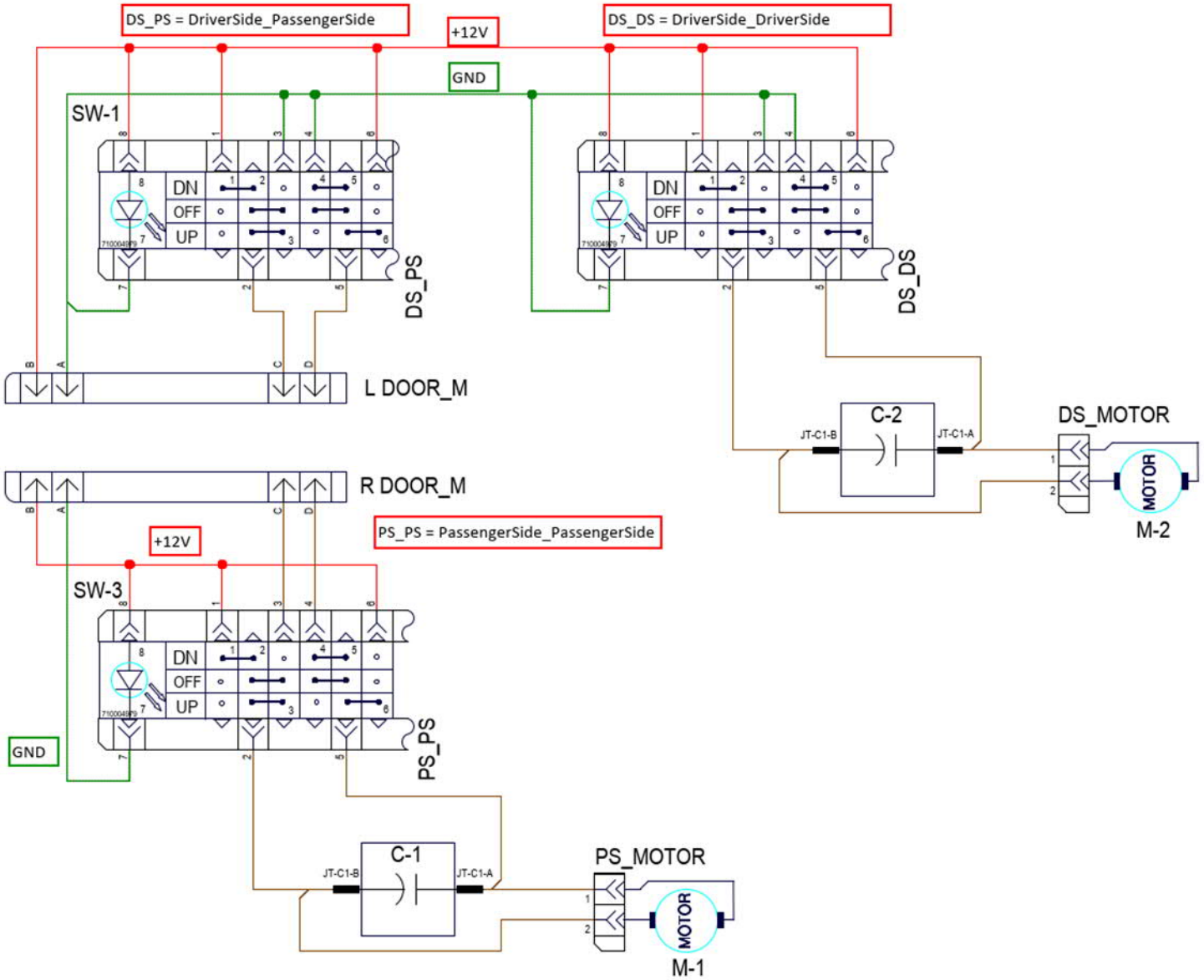

2021.02.25: Today my dealer e-mailed that they will replace the wiring harness under warranty. I assume that means in the wiring harness in the door. In any event, perhaps the above schematic might not be accurate for the new harness.

Alternative switch
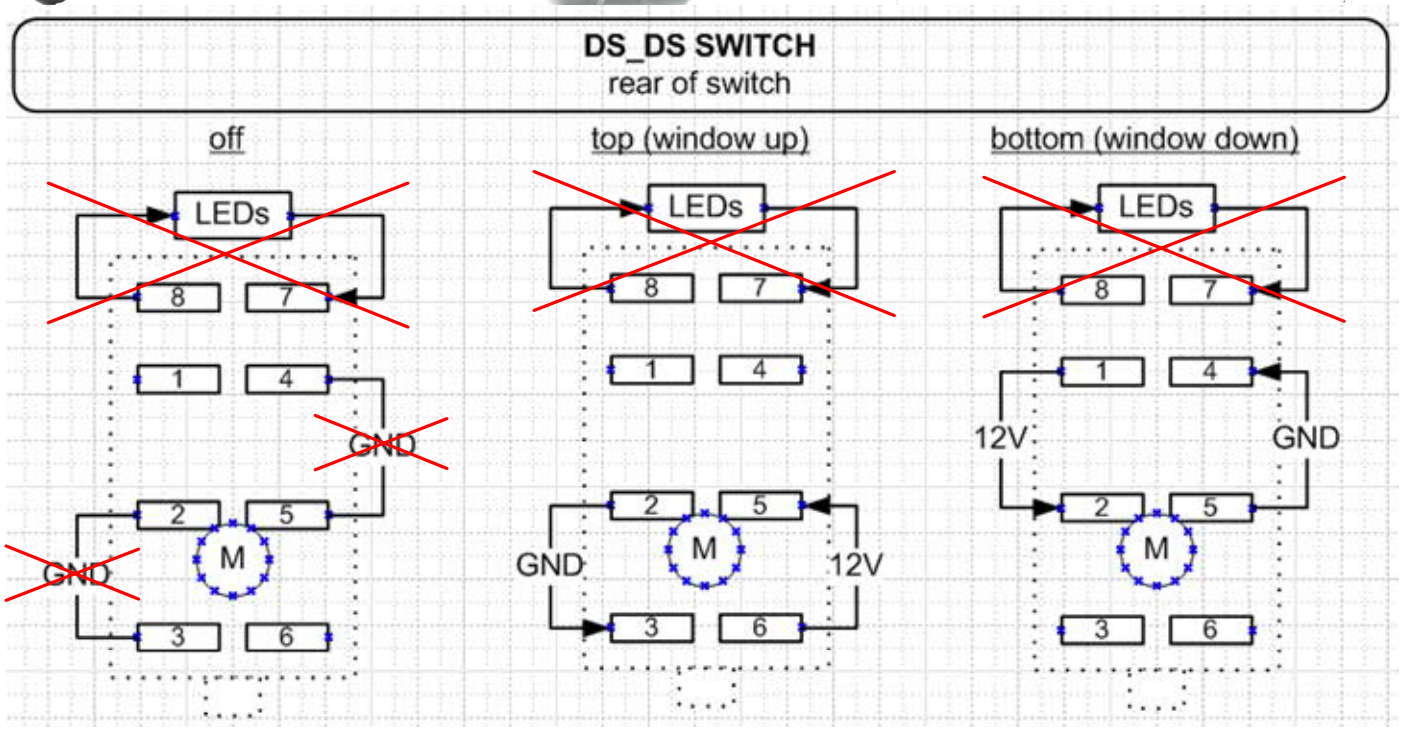
o Megatone Electronics on eBay. $7.95 + $3.50/order shipping. SKU: MT-DRA12106GB-223-A1
o DPDT Waterproof 20A 12/24VDC Momentary Rocker Switch (ON)-OFF-(ON) USA SELLER!!!
o https://www.ebay.com/itm/DPDT-Waterproof-20A-12-24VDC-Momentary-Rocker-Switch-ON-OFF-ON-USA-SELLER/293637991084?ssPageName=STRK%3AMEBIDX%3AIT&_trksid=p2060353.m2749.l2649
o Seems physically compatible:
  o Electrical contacts line up vertically and horizontally and the contact size seems the same. Fits the Can-Am connector perfectly after some gentle GrooveLock/Tongue&Groove pliers work the get the end contacts parallel with the center contacts. (I purchased four and the end contacts on all four were slightly out of parallel.)
  o Exterior dimensions seem identical, i.e., it looks like it will fit into the 715900526 housing. And the retention tabs on each end seem identical to the original switch.
  o There is a plastic pin protruding from the rear which must be removed. A scroll saw (DeWalt DW788) with a very narrow blade worked. A narrow piece of wood kept the switch horizontal on its side while cutting.
o Cons:
  o When in the OFF position, this switch does not connect pin 2 to pin 3 and pin 4 to pin 5 (as the original does). Referring to the schematic, this feature allows either _PS switch (DS_PS or PS_PS) to operate the passenger window while preventing concurrent operation. If you install this alternative switch into the DS_PS or PS_PS connector, the switch on the other side (PS_PS or DS_PS, respectively) will not operate the passenger window. This alternative switch can be used in the DS_PS or PS_PS connector to operate the passenger window as long as the connector on the other side contains a working 705800048 (but, again, that 705800048 will not operate the passenger window). All of these _PS-related statements are untested. This pin2-to-pin3 and pin4-to-pin5 switch feature does not affect DS_DS operation.
  o Requires more pressure than the original switch.
  o No LEDs.
  o Noisier than the original switch.
o Warning: I plugged this alternative switch into the DS_DS connector; UP and DOWN work. But I have not installed the switch into a 715900526 housing. Durability is unknown – too early to tell (spec'd for 10K cycles).